BOARD TO BOARD CONNECTOR MALE

3710 SERIES - 0.8MM PITCH

HSF RoHS

Specifications

- Electrical rating: AC/DC 50V 0.5A
- Insulation resistance: 500MΩ min
- Withstand Voltage: 200V AC/minute
- Operation temperature: -40°C to +105°C

Material

- Contact material: Phosphore bronze Gold plated
- Housing: LCP
- Max. processing Temp: 230°C for 30-60 seconds
  260°C for 10 seconds

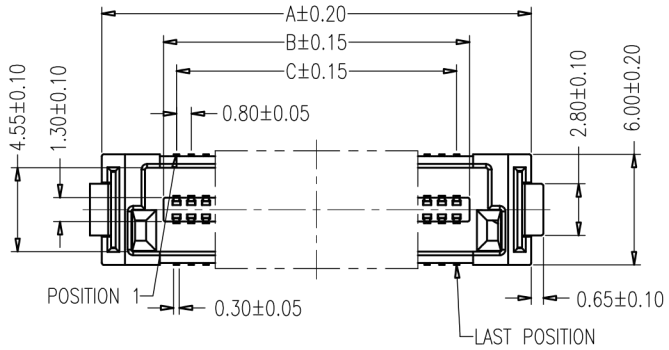

Recommended P.C.B Layout(Top Side)
(PCB BOARD TOLERANCE±0.05)

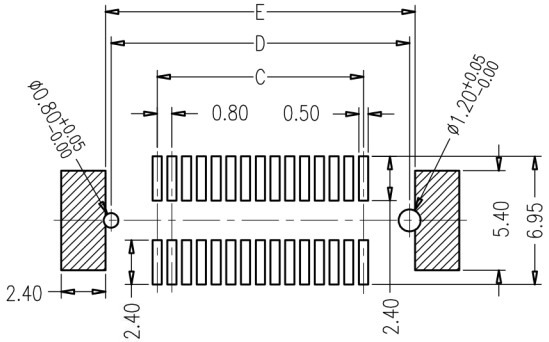

Ordering Information

3710M - XXX - XX X X (1)
(1 = 3710, 2 = XXX, 3 = XX, 4 = X, 5 = X)

1. **Connector Series**
2. **Number of pins per row (20→160P)**
3. **Plastic hight**
   - **80**= 8.00mm
4. **Contact Plating**
   - **A**= Gold Flash
   - **B**= 3U" Gold
   - **C**= 5U" Gold
   - **D**= 10U" Gold
   - **E**= 15U" Gold
   - **F**= 30U" Gold
   - **G**= Gold Flash/Tin
5. **Insulator material option**
   - **A**= BK-PA6T
   - **B**= BK-PA46
   - **C**= BK-PA9T
   - **D**= BK-LCP

(1). **Packaging** **1**=Tube **2**=Tube+Cap **3**=Reel+Cap

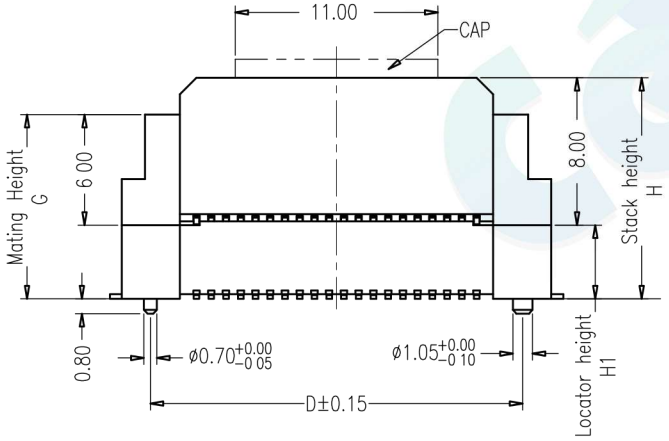

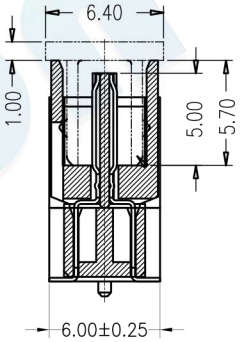

No. of Pins	Dimension				
	A	B	C	D	E
20	15.30	8.60	7.20	12.20	12.80
30	19.30	12.60	11.20	16.20	16.80
40	23.30	16.60	15.20	20.20	20.80
60	31.30	24.60	23.20	28.20	28.80
80	39.30	32.60	31.20	36.20	36.80
100	47.30	40.60	39.20	44.20	44.80
120	55.30	48.60	47.20	52.20	52.80
160	71.30	64.60	63.20	68.20	68.80

Dim H	Dim G	Dim H1
8.00	6.00	---
11.00	9.00	3.00
12.00	10.00	4.00
13.00	11.00	5.00
14.00	12.00	6.00

REV	DATE	MODIFICATION DESCRIPTION	CHANGE
A0	2012.04.18	NEW DRAWING	

OPERATION	
X.X	±0.30
X.XX	±0.20
X.XXX	±0.10
Angle	±3°
DIM	TOL

DRAW	BEN	12.04.18
CHECK		
APPROVE		

SCALE	FIT
UNIT	mm
SIZE	A4
SHEET	1/1
PROJ.	

Celion
votre partenaire en électronique

PART NO.	3710M-XXX-XXXX (1)
TITLE:	0.8BTB NPin Male heighten DDK-Type