PIN HEADER DIP DUAL ROW

12 SERIES. 2.54MM PITCH

HSF RoHS

Specifications

- Rated Current: 3.0AMP
- Contact Resistance: 20mΩ Max
- Withstand Resistance: 1000V AC/DC
- Insulation Resistance: 1000MΩ Min
- Operation Temperature: -40°C to +105°C

- Contact Material: Brass
- Contact Plating : Au Or Sn Over Ni
- Insulator Material : Polyester (UL94V-0)
- Standard : PA6T
- Max. Processing Temp : 230° for 30-60 seconds
  260° for 5 seconds

Recommended P.C.B Layout(Top Side)
(PCB BOARD TOLERANCE±0.05)

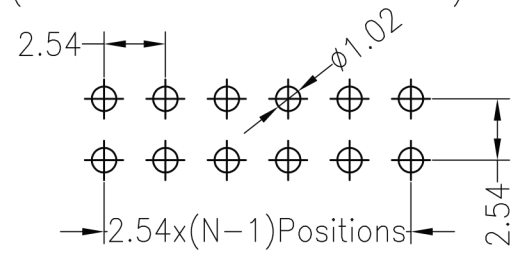

Ordering Information

1274D - 12 (XX) - AAA - B C P (1)

1 2 3 4 5 6 7

1. Connector Series

2. (H) Hauteur isolant

- H = **74**(Hauteur isolant : 7.4mm)

3. Number of pins per row

4. Pin Length

5. Insulator Material Option

- **A** = BK-PBT
- **B** = BK-PA66
- **C** = BK-PA6T
- **D** = BK-PA46
- **E** = BK-LCP

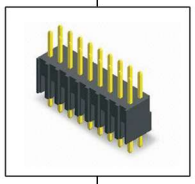

6. Contact Plating

- **A** = Gold Flash
- **B** = 5U" Gold
- **C** = 10U" Gold
- **D** = 15U" Gold
- **E** = 30U" Gold
- **F** = Gold Flash/Tin
- **G** = Tin

7. Post

- **W** (With Post)
- **Ø** (No Post)

***(1)*. Packaging**

Ø = PE Bag **1**= Tray **2**= Tube **3**= Tube+Cap **4**= Reel+Cap

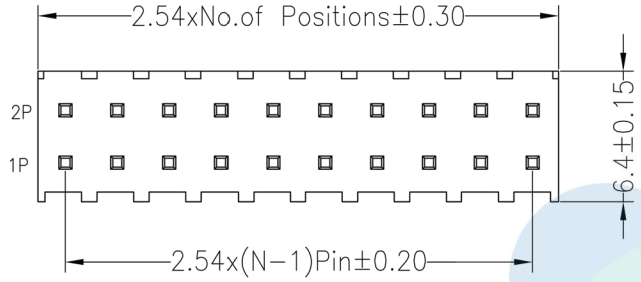

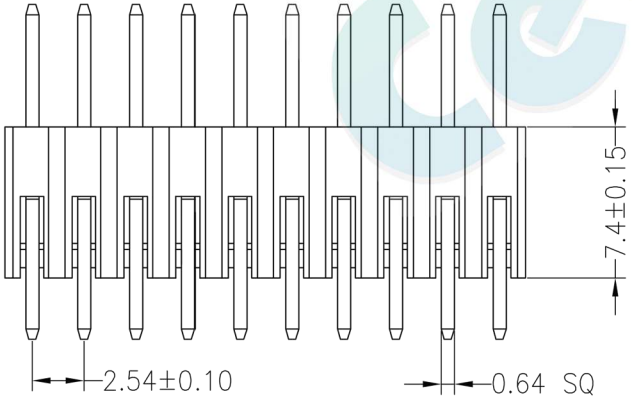

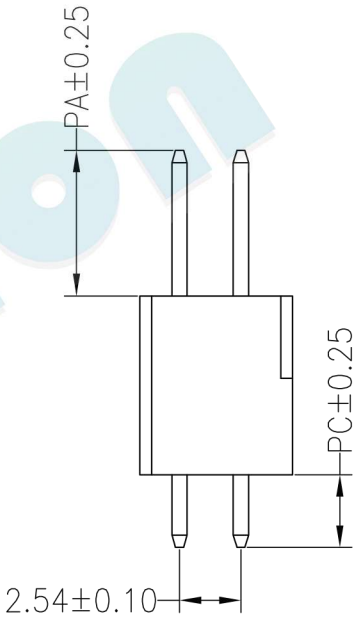

Dimension antitheses list			
ITEM	PA	PC	L
Standard	6.00	3.00	16.4
Alternate			

REV	DATE	MODIFICATION DESCRIPTION	CHANGE
A0	2012.11.11	NEW DRAWING	

OPERATION	
X.X	±0.30
X.XX	±0.20
X.XXX	±0.10
Angle	±3°
DIM	TOL

DRAW	YiYuSheng	12.11.11	SCALE	FIT
			UNIT	mm
CHECK			SIZE	A4
			SHEET	1/1
APPROVE			PROJ.	

Célion votre partenaire en électronique

PART NO.	1274D - 12XX - XXX - XXX (1)
TITLE:	2.54PH 2xNpin H7.40mm 180°