PIN HEADER DIP TRIPLE ROW DOUBLE PLASTIC

12 SERIES. 2.54MM PITCH

HSF RoHS FILE NO: E362810

Specifications

- Rated Current: 3.0AMP
- Contact Resistance: 20mΩ Max
- Withstand Resistance: 1000V AC/DC
- Insulation Resistance: 1000MΩ Min
- Operation Temperature: -40°C to +105°C
- Contact Material: Brass
- Contact Plating : Au Over Ni
- Insulator Material : Polyester (UL94V-0)
- Standard : PA6T
- Max. Processing Temp : 230° for 30-60 seconds
  260° for 10 seconds

Ordering Information

1225D - 23 (XX) - AAA - B C P (1)

1 2 3 4 5 6 7

1. Connector Series

2. (H) Hauteur isolant

- H = **25**(Hauteur isolant : 2.5mm)

3. Number of pins per row

4. Pin Length

5. Insulator Material Option

- **A** = BK-PBT
- **B** = BK-PA66
- **C** = BK-PA6T
- **D** = BK-PA46
- **E** = BK-LCP

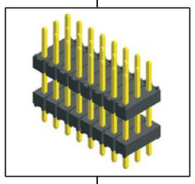

6. Contact Plating

- **A** = Gold Flash
- **B** = 5U" Gold
- **C** = 10U" Gold
- **D** = 15U" Gold
- **E** = 30U" Gold
- **F** = Gold Flash/Tin
- **G** = Tin

7. Post

- **W** (With Post)
- **Ø** (No Post)

***(1)*. Packaging**

Ø = PE Bag **1**= Tray **2**= Tube **3**= Tube+Cap **4**=Reel+Cap **5**= Reel+Mylar

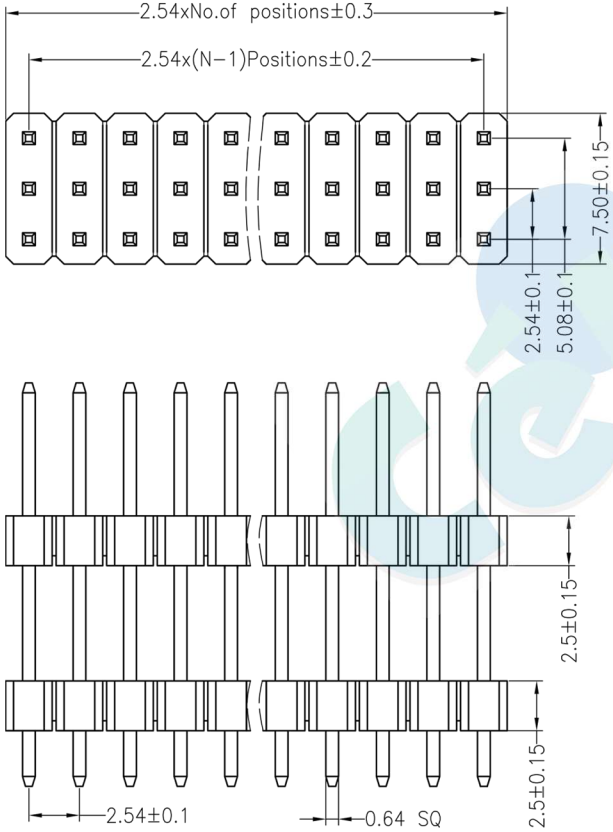

Recommended P.C.B Layout(Top Side)
(PCB BOARD TOLERANCE±0.05)

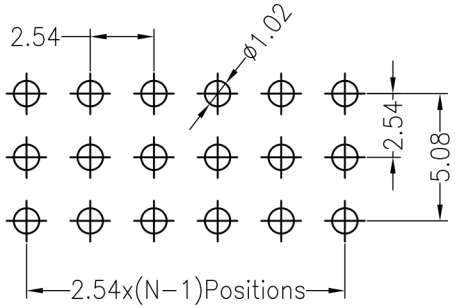

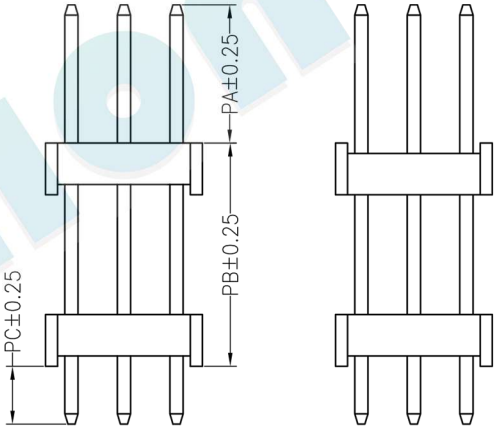

TYPE01 TYPE02

Dimension antitheses list				
ITEM	PA	PB	PC	L
Standard	6.00	5.00	3.00	14.0
Alternate				

REV	DATE	MODIFICATION DESCRIPTION	CHANGE
A0	2012.04.18	NEW DRAWING	

OPERATION	
X.X	±0.30
X.XX	±0.20
X.XXX	±0.10
Angle	±3°
DIM	TOL

DRAW	YiYuSheng	12.04.18
CHECK		
APPROVE		

SCALE	FIT
UNIT	mm
SIZE	A4
SHEET	1/1
PROJ.	

Célion votre partenaire en électronique

PART NO.	1225D - 23XX - XXX - XXX (1)
TITLE:	2.54PH Triple Row 180° H=2.5