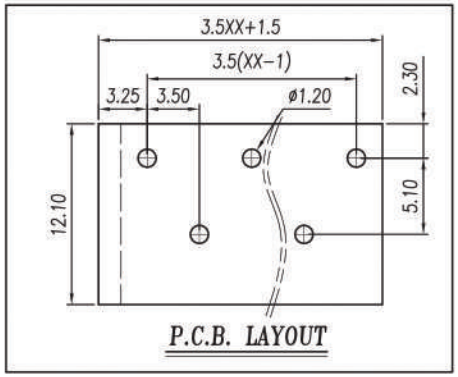

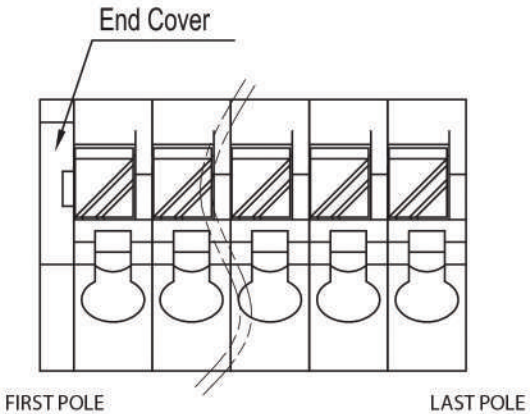

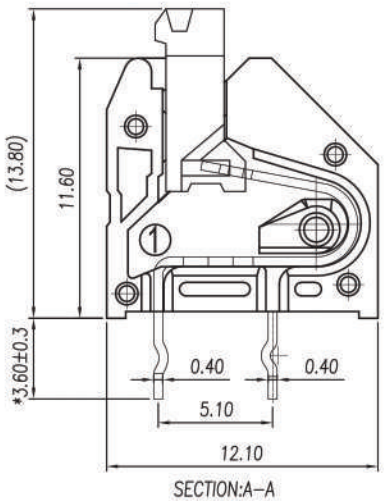

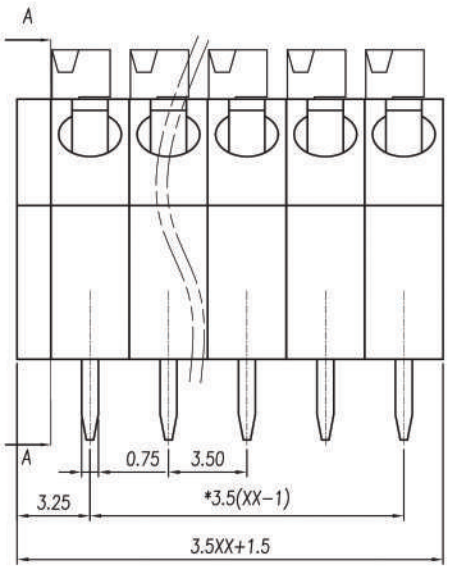

Approvals

c UL us	5A-300V
DVE	not approved

Electrical

Rated voltage	450 V
Rated current	8 AMP
Contact resistance	20 mΩ
Insulation resistance	500 MΩ/DC 500 V
Withstanding voltage	AC 2000 V/1 min
Wire range	1,5 mm² 22÷16 AWG
Torque	---
Temp. Range	-40°C + 105°C
Stripping lenght	8 mm
Max sold. time	+250°C for 5 sec.

Dimensions

Pitch	3.5 mm
Poles	1÷xx

Material

Housing	PA66 UL94V0
Pin	Phosphore bronze, Ni plated
Cage	---
Screws	---
Side Block	---
Nut screw	---
Clamp	---

General description of ordering code

Series	n. Poles	Pitch	Version	Color	Custom
MRM1	1÷xx	-3.5	-V		

Version	Date
17/01	25/10/17

CÉLION Votre partenaire électronique

RoHS Compliant Lead Free CE

UNITS: mm	SHEET SIZE: ISO A4	SCALE: 3:1	
> 0 ~ 3	> 3 ~ 18	> 18 ~ 50	> 50 ~ 120
± 0.12	± 0.15	± 0.3	± 0.5

First angle projection

MRM1-3.5-V